5. Exploded Views and Parts List

Contents

5.1 Main · · · · · · · · · · · · · · · · · 5-2
5.2 Top Cover · · · · · · · · · · · · · · 5-4
5.3 Cover Ass'y · · · · · · · · · · · · · 5-6
5.4 Front Cover · · · · · · · · · · · · · 5-8
5.5 Rear Cover · · · · · · · · · · · · · 5-10
5.6 Frame · · · · · · · · · · · · · · · · 5-12
5.7 Main Drive · · · · · · · · · · · · · 5-17
5.8 Rear Guide · · · · · · · · · · · · · 5-19
5.9 Fuser · · · · · · · · · · · · · · · · 5-21
5.10 Duplex Unit · · · · · · · · · · · · 5-23
5.11 Cassette · · · · · · · · · · · · · · 5-25
5.12 SCF · · · · · · · · · · · · · · · · 5-27

DIGITAL LASER PRINTER

The keynote of Product

Smallest Duplex Built-in
Mono Laser Printer (Low Noise)

- 28ppm(A4) / 30ppm(Ltr)
- PCL6, PS3, 1,200x1,200dpi
- 400MHz processor
- USB 2.0, N/W (ML-2851ND only)
- 32MB (Max.160MB : factory option)
- 2K Standard, 5K High Yield
- Paper Input: 250 sh CST + 1 sh MP
- Standard Duplex Printing
- Options: 250 sh SCF

IT-Spares.eu

5.1 Main

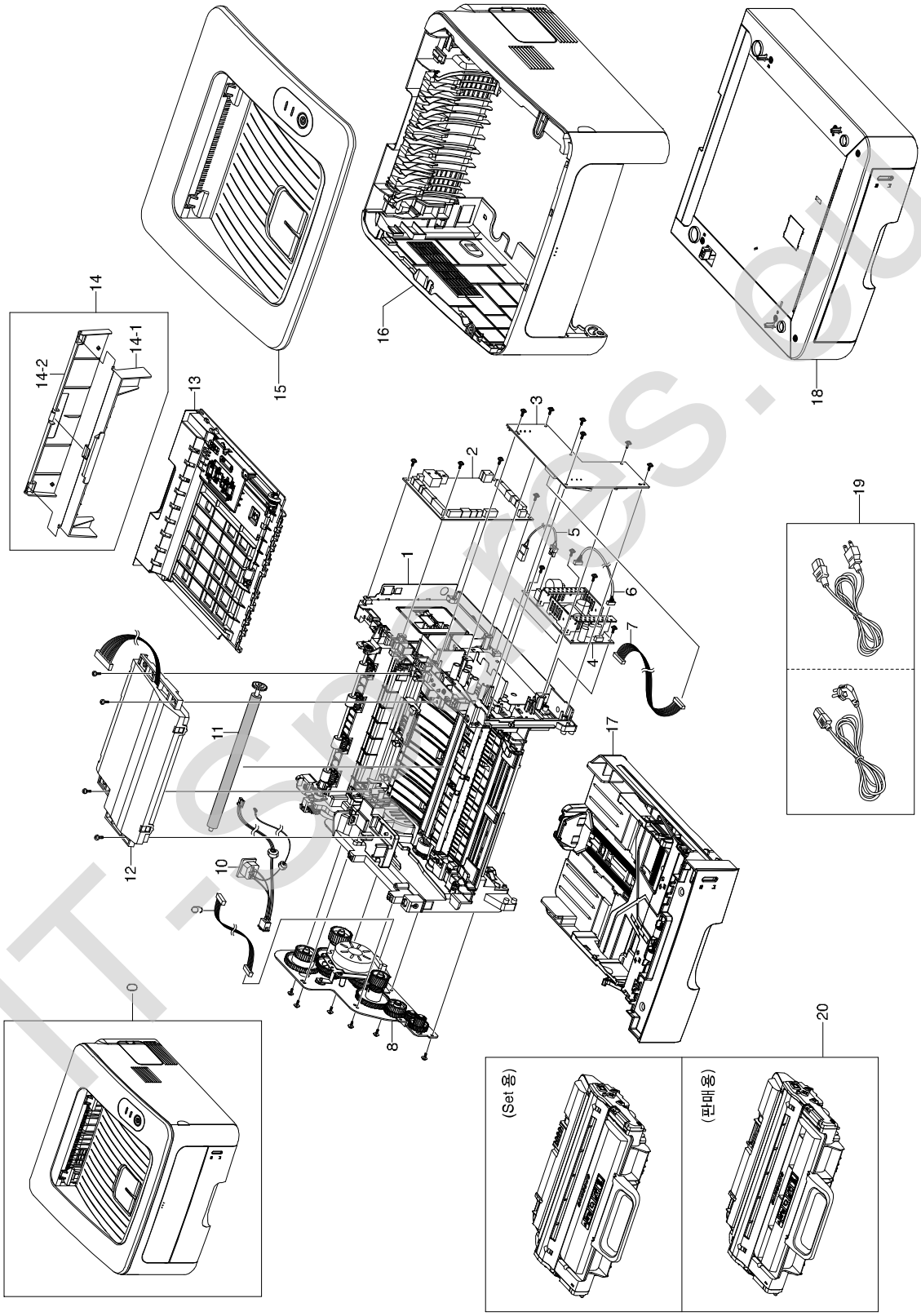

IT-schemes.eu

Main Parts List

SA : SERVICE AVAILABLE, SNA : SERVICE not AVAILABLE

Drawer#	SEC_Code	Description	QT'y	Service	Remark
5.1-0	ML-2850D	SET			
5.1-1	JC63-01572A	SHIELD-CONTROLLER	1	SA	
5.1-2	JC92-01969B	PBA MAIN-CONTROLLER	1	SA	
5.1-3	JC44-00156A	HVPS	1	SA	
5.1-4	JC44-00096A	SMPS-PSP_TYPE2_V2C	1	SA	
5.1-5	JC39-00817A	CBF HARNESS-FUSER AC(SMPS)	1	SA	
5.1-6	JC39-00828A	CABLE FORM CONN COAX	1	SA	
5.1-7	JC39-00824A	CBF HARNESS-HVPS	1	SA	
5.1-8	JC96-04731A	ELA UNIT-RX DRIVE	1	SA	
5.1-9	JC39-00820A	CBF HARNESS-MOTOR & SOLENOID	1	SA	
5.1-10	JC39-00816A	CBF HARNESS-AC-INLET	1	SA	
5.1-11	JC66-01218A	ROLLER-TRANSFER	1	SA	
5.1-12	JC96-04733A	ELA UNIT-LSU	1	SA	
5.1-13	JC96-04736A	MEA UNIT-DUPLEX	1	SA	
5.1-14-1	JC63-01650A	COVER-DUPLEX	1	SA	
5.1-14-2	JC63-01651A	COVER-REAR DUPLEX	1	SA	
5.1-15	JC97-03012A	MEA-COVER TOP	1	SA	
5.1-16-1	JC97-03013A	MEA UNIT-COVER_LEFT	1	SA	
5.1-16-2	JC97-03014B	MEA UNIT-COVER_RIGHT	1	SA	
5.1-16-3	JC97-03015A	MEA UNIT-COVER_REAR	1	SA	
5.1-16-4	JC97-03016A	MEA UNIT-COVER FRONT	1	SA	
5.1-17	JC97-03017A	MEA UNIT-CASSETTE	1	SA	
5.1-18	JC96-04735A	ELA UNIT-SCF	1	SNA	
5.1-19	3903-000085	CBF-POWER CORD(110V)	1	SA	
5.1-19	3903-000042	CBF-POWER CORD(220V)		SA	
5.1-20	JC96-04823B	ELA HOU-DEVE	1	SNA	

IT-Spares.eu

5.2 Top Cover

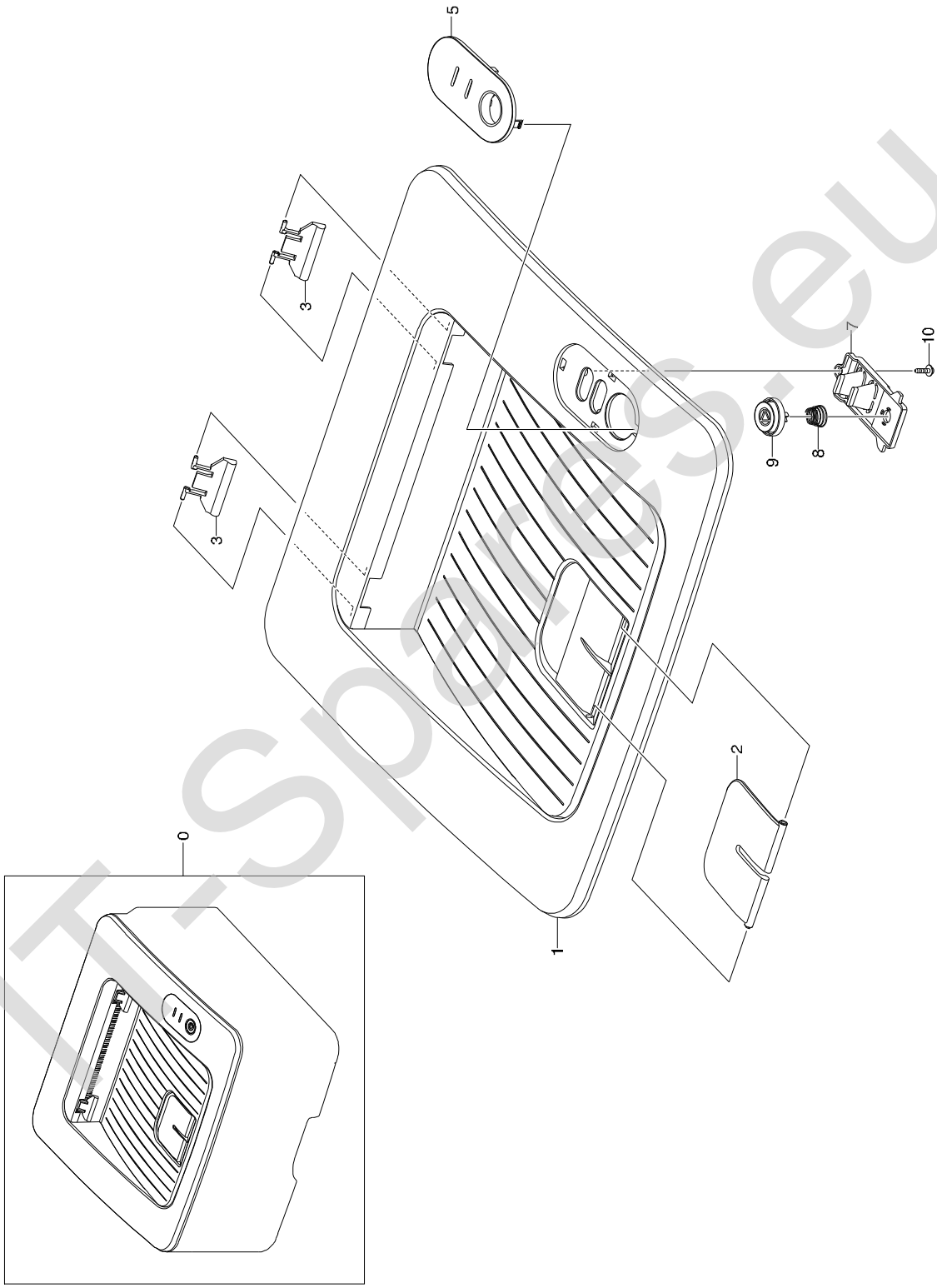

IT-Spares.eu

Top Cover Parts List

SA : SERVICE AVAILABLE, SNA : SERVICE not AVAILABLE

Drawer#	SEC_Code	Description	QT'y	Service	Remark
5.2-0	JC97-03012B	MEA UNIT-COVER_TOP	1	SA	
5.2-1	JC63-01523A	COVER-TOP	1	SNA	
5.2-2	JC61-02230A	STACKER-RX	1	SA	
5.2-3	JC72-01343A	PMO-SUB_M_STACKER	2	SA	
5.2-5	JC63-01528A	COVER-DUMMY KEY	1	SNA	
5.2-7	JC67-00274A	LENS-LED	1	SA	
5.2-8	6107-001169	SPRING-CS	1	SA	
5.2-9	JC64-00359A	KEY-ON_LINE	1	SA	
5.2-10	6003-000196	SCREW-TAPTITE	1	SNA	

IT-Spares.eu

5.3 Cover Ass'y

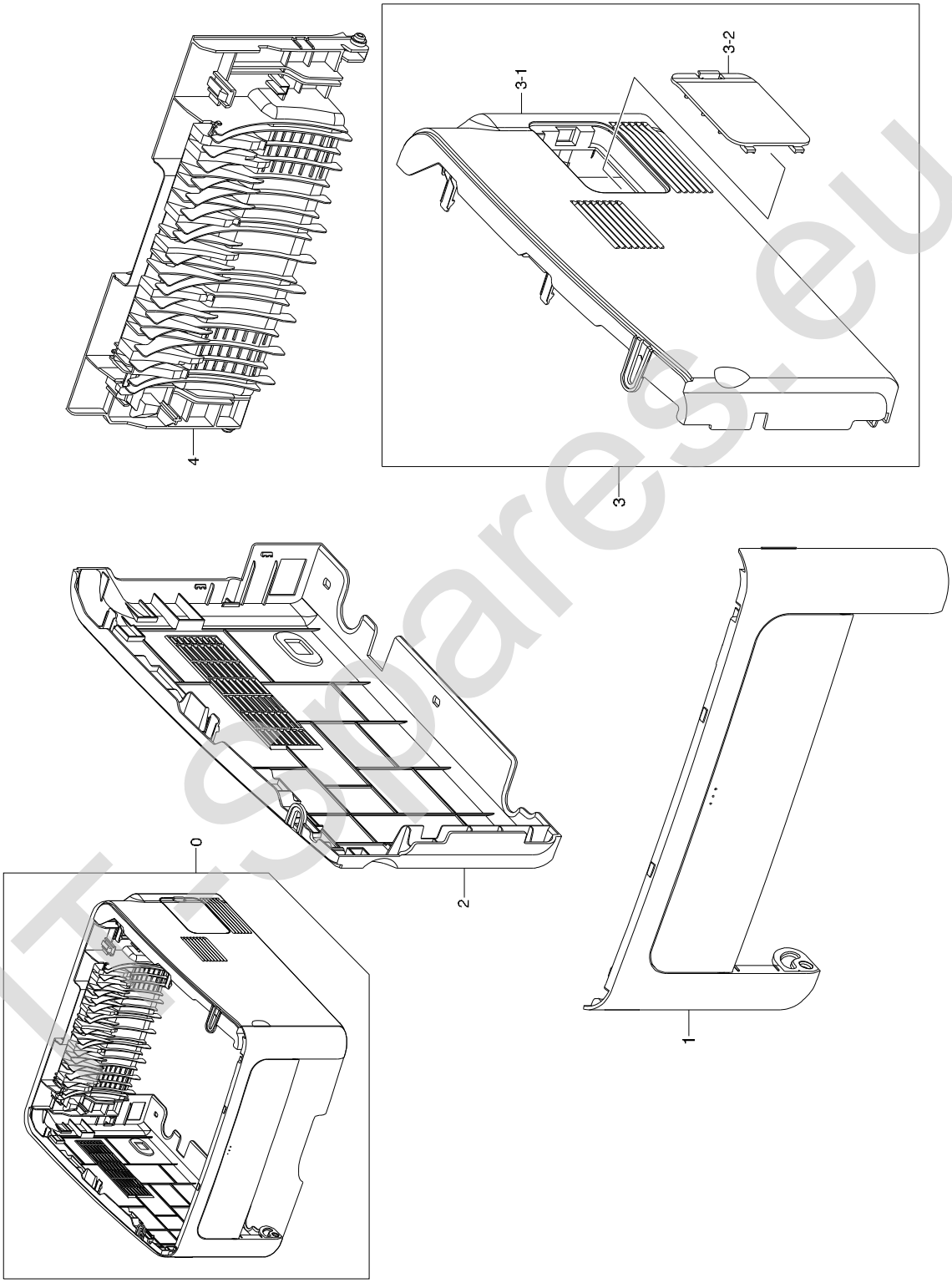

ITspares.eu

Cover Ass'y Parts List

SA : SERVICE AVAILABLE, SNA : SERVICE not AVAILABLE

Drawer#	SEC_Code	Description	QT'y	Service	Remark
5.3-0	JC96-04741B	ELA HOU-COVER	1	SA	
5.3-1	JC97-03016A	MEA UNIT-COVER_FRONT	1	SA	
5.3-2	JC97-03013A	MEA UNIT-COVER_LEFT	1	SA	
5.3-3	JC97-03014B	MEA UNIT-COVER_RIGHT	1	SA	
5.3-3-1	JC63-01525A	COVER-RIGHT	1	SNA	
5.3-3-2	JC63-01570A	COVER-RIGHT_DIMM	1	SNA	
5.3-4	JC97-03015A	MEA UNIT-COVER_REAR	1	SA	

IT-Spares.eu

5.4 Front Cover

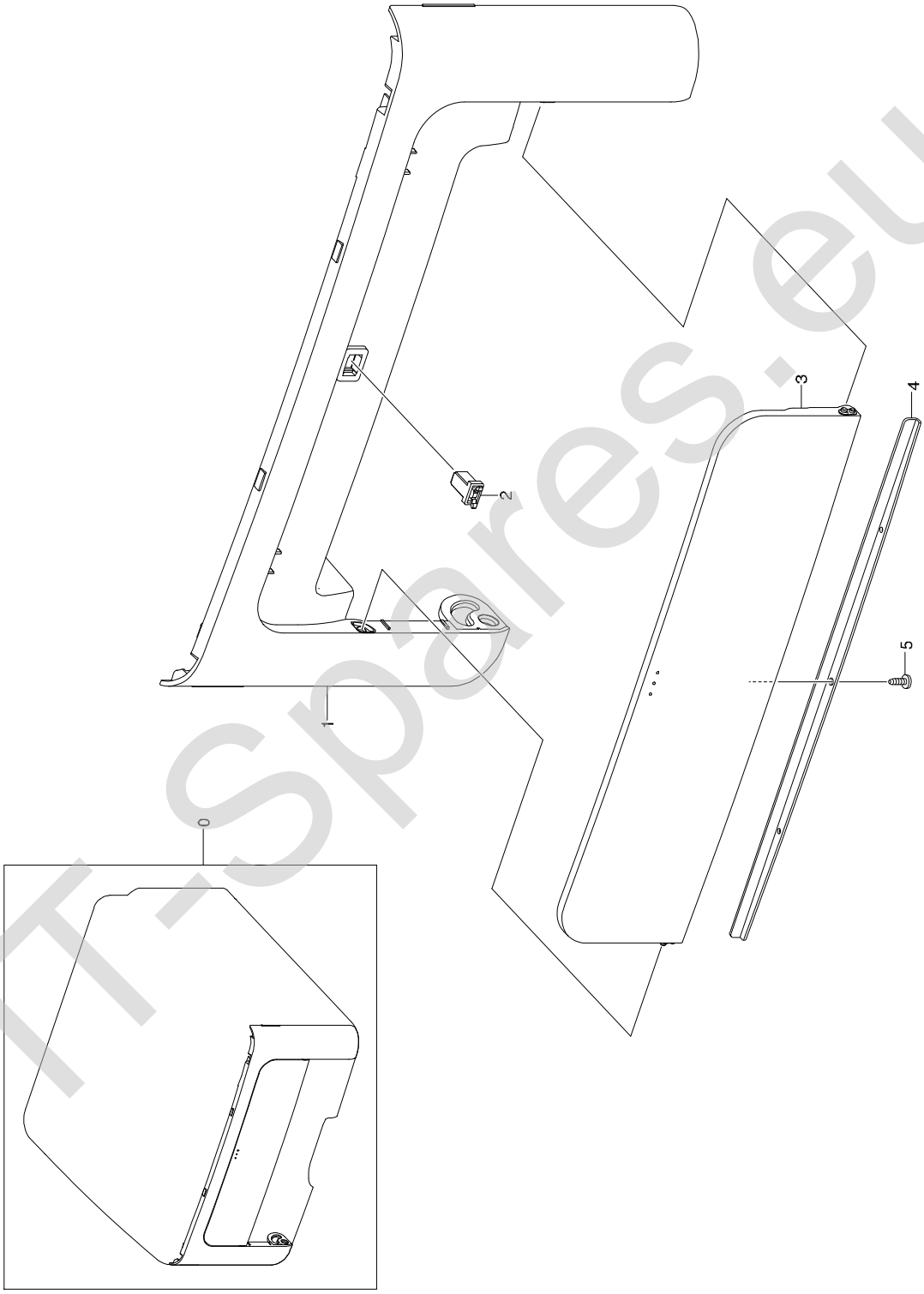

IT-Spares.eu

Front Cover Parts List

SA : SERVICE AVAILABLE, SNA : SERVICE not AVAILABLE

Drawer#	SEC_Code	Description	QT'y	Service	Remark
5.4-0	JC97-03016A	MEA UNIT-COVER_FRONT	1	SA	
5.4-1	JC63-01527A	COVER-FRONT	1	SA	
5.4-2	JB64-00007A	LOCKER-LATCH PUSH	1	SA	
5.4-3	JC63-01569A	COVER-MANUAL	1	SNA	
5.4-4	JC61-02267A	BRACKET-MANUAL	1	SNA	
5.4-5	6003-000282	SCREW-TAPTITE	1	SNA	

IT-Spares.eu

5.5 Rear Cover

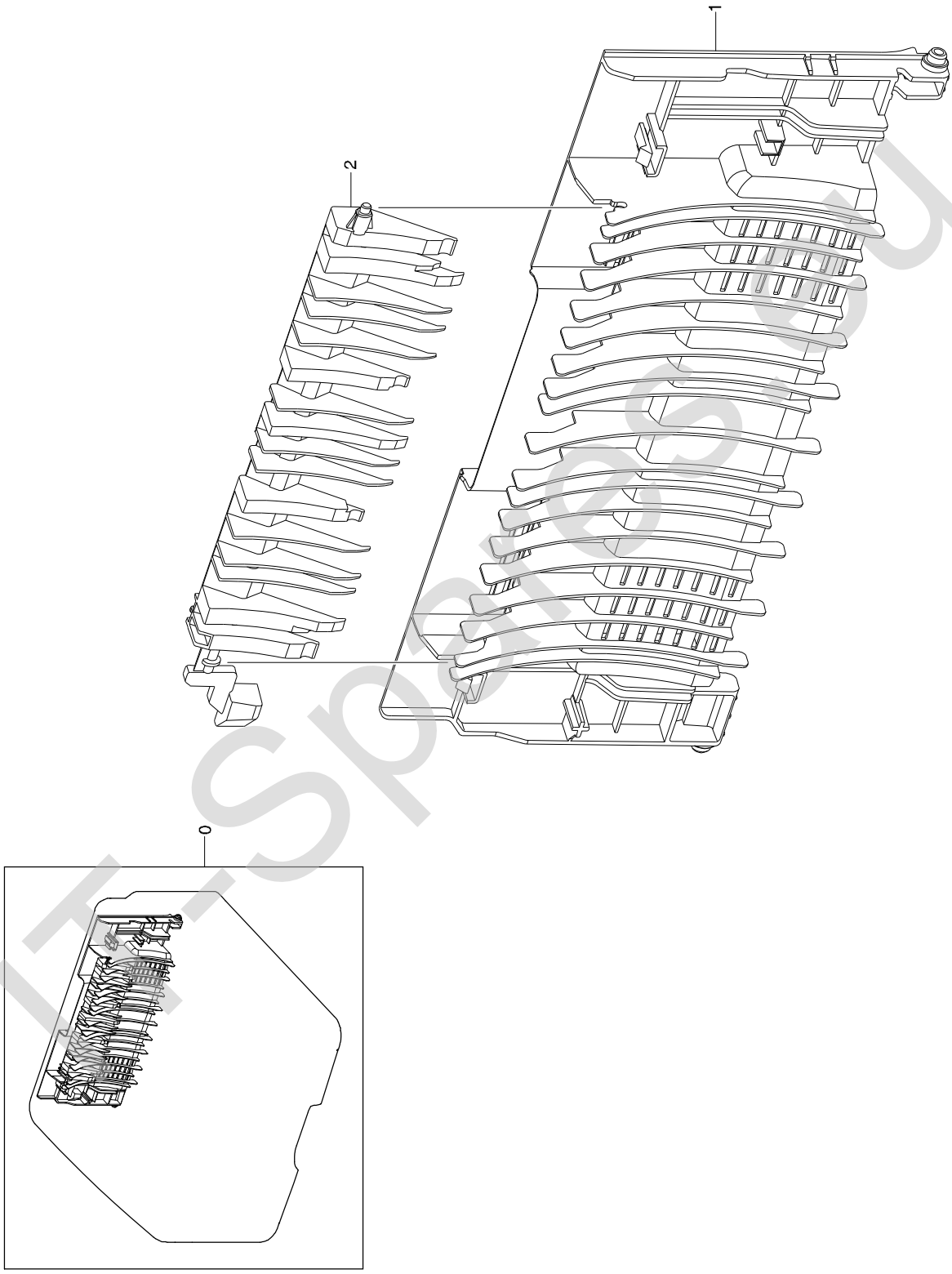

IT-Spares.eu

Rear Cover Parts List

SA : SERVICE AVAILABLE, SNA : SERVICE not AVAILABLE

Drawer#	SEC_Code	Description	QT'y	Service	Remark
5.5-0	JC97-03015A	MEA UNIT-COVER_REAR	1	SA	
5.5-1	JC63-01526A	COVER-REAR	1	SNA	
5.5-2	JC61-02399A	GUIDE-CHANGE_DUP	1	SNA	

IT-Spares.eu

5.6 Frame1

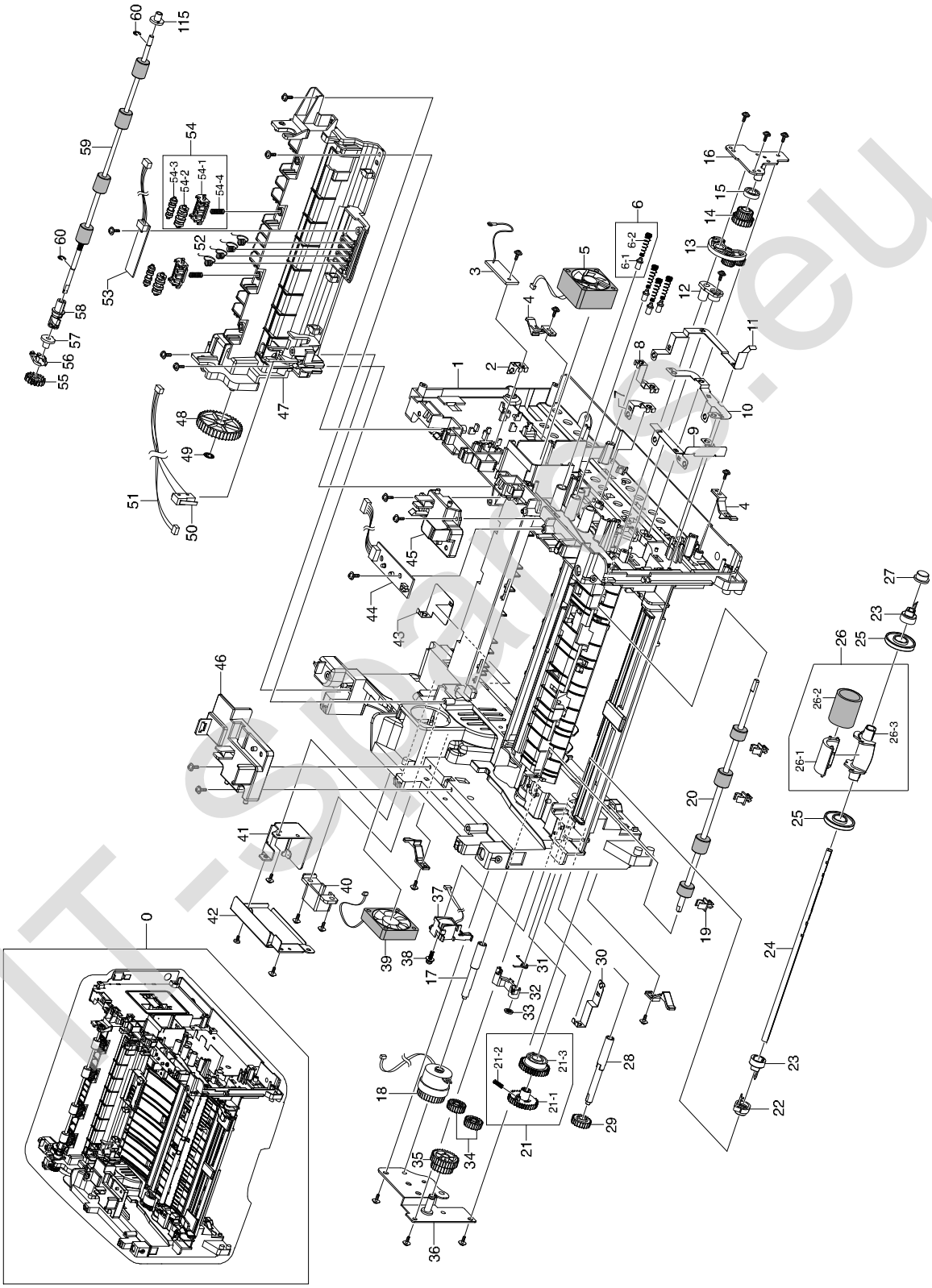

IT-spare.eu

Frame2

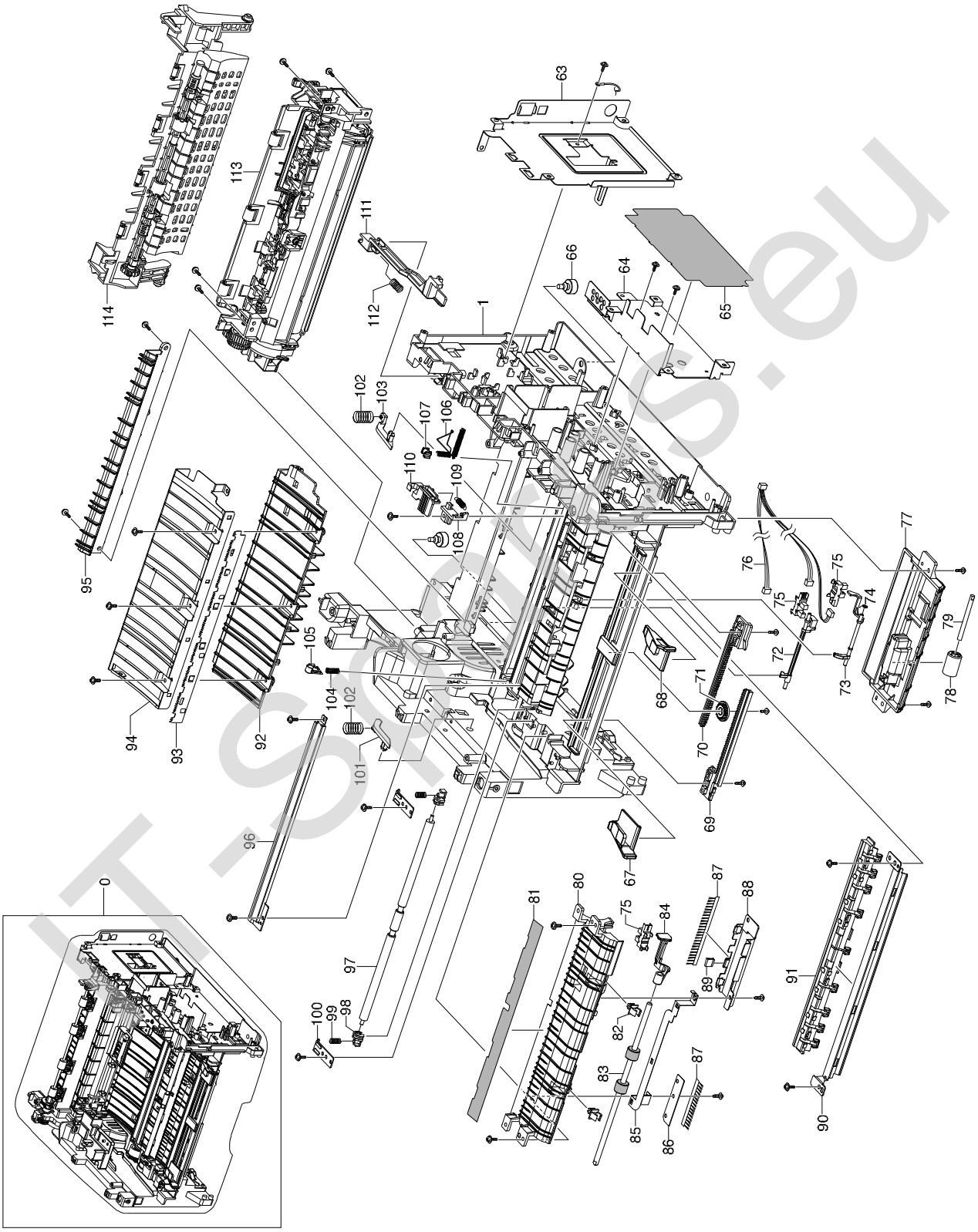

IT-Spares.eu

Frame Parts List

SA : SERVICE AVAILABLE, SNA : SERVICE not AVAILABLE

Drawer#	SEC_Code	Description	QT'y	Service	Remark
5.6-0	JC96-04738A	ELA HOU-FRAME_220V	1	SA	
5.6-1	JC61-02187A	FRAME-BASE	1	SA	
5.6-2	JC63-01616A	GROUND-ZENOR	1	SA	
5.6-3	JC92-01488A	PBA MAIN-ZENER	1	SA	
5.6-4	JC72-00983A	PMO-LOCKER CST	4	SA	
5.6-5	JC31-00085A	FAN-DC	1	SA	
5.6-6-1	JC70-40912A	ICT SHAFT HV LARGE	4	SA	
5.6-6-2	JC61-00031A	SPRING ETC-HV LARGE	4	SA	
5.6-7	JC63-01619A	GROUND-MOTOR_MAIN	1	SA	
5.6-8	JC63-01618A	GROUND-CONTROLLER	1	SA	
5.6-9	JC63-01620A	GROUND-PAPER	1	SA	
5.6-10	JC63-01613A	GROUND-BRKT FRONT	1	SA	
5.6-11	JC63-01621A	GROUND-TRANSFER	1	SA	
5.6-12	JC61-02233A	HOLDER-REGI	1	SA	
5.6-13	JC96-04732A	MEA UNIT SWING	1	SA	
5.6-14	JC66-01651A	GEAR RDCN 23/23	1	SA	
5.6-15	JC61-02220A	COLLAR SWING	1	SA	
5.6-16	JC61-02225A	BRKT SWING	1	SA	
5.6-17	JC66-01655A	SHAFT-FEED REGI	1	SA	
5.6-18	JC66-01865A	CLUTCH ELECTRIC	1	SA	
5.6-19	JC72-00382B	PMO-BUSHING FEED	5	SA	
5.6-20	JC66-01656A	ROLLER-FEED REGI	1	SA	
5.6-21	JC97-03141A	MEA UNIT-GEAR PICK UP	1	SA	
5.6-21-1	JC72-00979A	GEAR PICK UP A	1	SA	
5.6-21-2	6107-001167	SPRING-CS	1	SA	
5.6-21-3	JC72-00980A	GEAR PICKUP B	1	SA	
5.6-22	JC66-01889A	CAM-PICK UP	1	SA	
5.6-23	JC72-00982A	PMO-IDLE PICK_UP	2	SA	
5.6-24	JC66-01692A	SHAFT-P-PICK_UP	1	SA	
5.6-25	JC61-00915A	STOPPER-M-PICK UP_R2	2	SA	
5.6-26	JC97-03062A	MEA UNIT-PICK UP	1	SA	
5.6-26-1	JC73-00265A	RUBBER PICK_UP	1	SA	
5.6-26-2	JC61-00910A	HOUSING-M-PICK UP2_R2	1	SA	
5.6-26-3	JC61-00909A	HOUSING-M-PICK UP_R2	1	SA	
5.6-27	JC61-00587A	BUSH-M-PICK_UP R	1	SA	
5.6-28	JC66-01660A	SHAFT-FEED	1	SA	
5.6-29	JC66-01634A	GEAR-FEED DR 16	1	SA	
5.6-30	JC63-01614A	GROUND-GUIDE TR	1	SA	
5.6-31	6107-001352	SPRING-TS	1	SA	
5.6-32	JC66-00377A	CAM-M-PICK_UP	1	SA	
5.6-33	6044-000001	RING-CS;ID3,OD3,T0.25,BLACK,SU	1	SA	
5.6-34	JC66-40964A	GEAR-EXIT,IDLE(Z17)	2	SA	
5.6-35	JC66-01627A	GEAR-FEED RDCN 24/19	1	SA	

IT-spares.eu

Frame Parts List

SA : SERVICE AVAILABLE, SNA : SERVICE not AVAILABLE

Drawer#	SEC_Code	Description	QT'y	Service	Remark
5.6-36	JC61-02226A	BRACKET-FEED	1	SA	
5.6-37	JC33-00026A	SOLENOID PCIKUP	1	SA	
5.6-38	6003-000301	SCREW-TAPTITE	1	SA	
5.6-39	JC31-00085A	FAN-DC	2	SA	
5.6-40	JC61-02232A	HOLDER-POWER	1	SA	
5.6-41	JC63-01571A	SHIELD-POWER_SWITCH	1	SA	
5.6-42	JC61-02238A	PLATE-POWER CAP	1	SA	
5.6-43	JC63-01615A	GROUND-SCF	1	SA	
5.6-44	JC92-01439A	PBA LED-PANEL	1	SA	
5.6-45	JC61-02312A	FRAME-LSU-HOLDER-R	1	SA	
5.6-46	JC61-02311A	FRAME-LSU-HOLDER_L	1	SA	
5.6-47	JC61-02310A	FRAME-EXIT_HIGH	1	SA	
5.6-48	JC66-00875A	GEAR-M-FUSER IDLE 1	1	SA	
5.6-49	6044-001005	RING-CS	1	SA	
5.6-50	JC39-00826A	CBF HARNESS-LSU SW&FAN	1	SA	
5.6-52	JC65-00019A	TERMINAL-CRUM	4	SA	
5.6-53	JC92-01829A	PBA SUB-TERMINAL	1	SA	
5.6-54-1	JC61-01172A	HOLDER-M-EXIT F/DOWN	2	SNA	
5.6-54-2	JC66-00824A	ROLLER-EXIT MAIN	2	SNA	
5.6-54-3	JC66-00830A	ROLLER-EXIT FR	2	SNA	
5.6-54-4	6107-001163	SPRING CS	2	SNA	
5.6-55	JC66-40209A	GEAR-M-EXIT	1	SA	
5.6-56	JC72-41191B	PMO-BEARING SHAFT	2	SA	
5.6-57	JC61-02308A	SUPPORT-ROLLER	1	SA	
5.6-59	JC66-01662A	ROLLER-EXIT F/DOWN	1	SA	
5.6-63	JC63-01572A	SHIELD-CONTROLLER	1	SA	
5.6-64	JC63-01573A	SHIELD-SMPS	1	SA	
5.6-65	JC62-00461A	INSULATION-SMPS	1	SA	
5.6-66	JC61-40001A	FOOT-ML80	2	SA	
5.6-67	JC70-00546A	ADJUST-MANUAL L	1	SA	
5.6-68	JC70-00547A	ADJUST-MANUAL R	1	SA	
5.6-69	JC70-00304A	ADJUST RACK-M-MANUAL	2	SA	
5.6-71	JC66-00387A	GEAR-RACK_PINION	1	SA	
5.6-72	JC66-01647A	ACTUATOR-FEED	1	SA	
5.6-73	JC66-01646A	ACTUATOR-DUPLEX	1	SA	
5.6-74	6107-001164	SPRING-TS	2	SA	
5.6-75	0604-001095	PHOTO INTERRRUPTER	3	SA	
5.6-76	JC39-00824A	CBF HARNESS-HVPS	1	SA	
5.6-77	JC61-02309A	FRAME-DUPLEX_PATH	1	SA	
5.6-78	JC66-01022A	ROLLER-M-IDLE SCF	1	SA	
5.6-79	JC66-01846A	SHAFT-DUP_ROLLER	1	SA	
5.6-80	JC61-02303A	GUIDE-FRAME_DUPLEX	1	SA	
5.6-81	JC63-01743A	SHEET-GUIDE_DUP_PATH	1	SA	

IT-spares.eu

Frame Parts List

SA : SERVICE AVAILABLE, SNA : SERVICE not AVAILABLE

Drawer#	SEC_Code	Description	QT'y	Service	Remark
5.6-82	JC72-00382B	PMO-BUSHING FEED	5	SA	
5.6-83	JC66-00598A	ROLLER-FEED	1	SA	
5.6-84	JC66-01648A	ACTUATOR-EMPTY	1	SA	
5.6-85	JC63-01617A	GROUND-PICK_UP	1	SA	
5.6-86	JC63-00527A	SHEET-BRUSH	1	SA	
5.6-87	JC75-00095A	MEC-BRUSH PICK UP	1	SNA	
5.6-88	JC61-02268A	BRACKET-COVER FRONT	1	SA	
5.6-89	JC63-01676A	GROUND-BRUSH PICK UP	1	SA	
5.6-90	JC61-02306A	GUIDE-PAPER	1	SA	
5.6-91	JC61-02400A	GUIDE FRONT PAPER	1	SA	
5.6-92	JC61-02305A	GUIDE-TR_RIB	1	SA	
5.6-93	JC61-00604B	PLATE-E_SAW	1	SA	
5.6-94	JC61-02307A	GUIDE-TR	1	SA	
5.6-95	JC61-02196A	GUIDE-INPUT	1	SA	
5.6-96	JC61-02236A	PLATE EARTH TRANSFER	1	SA	
5.6-97	JC66-01654A	SHAFT-FEED IDLE	1	SA	
5.6-98	JC61-00585A	BUSH-M-FEED IDLE	2	SA	
5.6-99	JC61-70958A	SPRING ETC-TR	2	SA	
5.6-100	JC61-00914A	PLATE-P-PUSH BUSHING	2	SA	
5.6-101	JC72-00984A	PMO-PLATE GUIDE DEVE_L	1	SA	
5.6-102	JC61-70932A	SPRING ETC-GUIDE DEVE	2	SA	
5.6-103	JC72-00985A	PMO-PLATE GUIDE DEVE_R	1	SA	
5.6-104	6107-001370	SPRING TR	1	SA	
5.6-105	JC61-02468A	BUSH-TR_L	1	SA	
5.6-106	JC65-00033A	TERMINAL SPRING TR	1	SA	
5.6-107	JC61-00588A	PMO-BUSHING_TR(L)	1	SA	
5.6-108	JC61-02304A	GUIDE-HOLDER_TR	1	SA	
5.6-109	JC61-00553A	SPRING ETC-ES (Guide holder TR)	1	SA	
5.6-110	JC61-02231A	HOLDER-TRANSFER	1	SA	
5.6-111	JC66-01649A	LINK-COVER_REAR	1	SA	
5.6-112	6107-001172	SPRING-CS	1	SA	
5.6-114	JC97-03067A	MEA UNIT-GUIDE REAR	1	SA	
5.6-115	JC61-00424A	BUSH-4	1	SNA	

IT-spares.eu

5.7 Main Drive

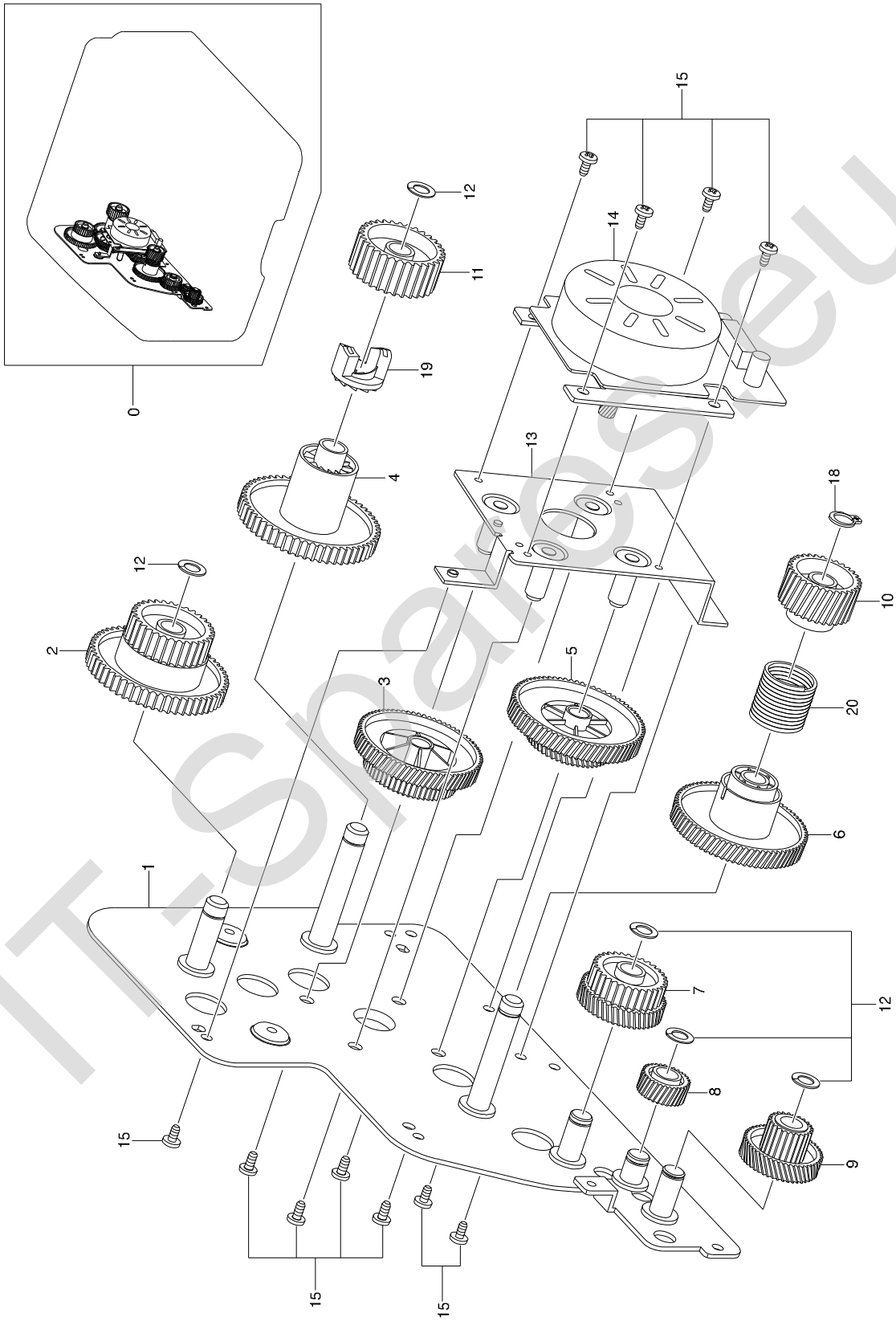

IT-Spares.eu

Main Drive Parts List

SA : SERVICE AVAILABLE, SNA : SERVICE not AVAILABLE

Drawer#	SEC_Code	Description	QT'y	Service	Remark
5.7-0	JC96-04731A	ELA UNIT-DRIVE	1	SA	
5.7-1	JC61-02195A	BRACKET-GEAR	1	SNA	
5.7-2	JC66-01641A	GEAR-EXIT RDCN 61/28	1	SA	
5.7-3	JC66-01628A	GEAR-RDCN 83/40	1	SA	
5.7-4	JC66-01632A	GEAR-FUSER DR IN 61	1	SA	
5.7-5	JC66-01626A	GEAR-RDCN 89/55	1	SA	
5.7-6	JC66-01633A	GEAR-OPC DR IN 89	1	SA	
5.7-7	JC66-01625A	GEAR-FEED RDCN 56/25	1	SA	
5.7-8	JC66-01640A	GEAR-PICKUP IDLE 31	1	SA	
5.7-9	JC66-01650A	GEAR-RDCN 52/18	1	SA	
5.7-10	JC66-01798A	GEAR-OPC CLUTCH 29	1	SA	
5.7-11	JC66-01637A	GEAR-FUSER DR OUT 37	1	SA	
5.7-12	6031-000023	WASHER-PLAIN	5	SNA	
5.7-13	JC61-02227A	BRACKET-MOTOR	1	SNA	
5.7-14	JC31-00090A	MOTOR BLDC	1	SNA	
5.7-15	6003-000269	SCREW-TAPTITE	11	SA	
5.7-18	6044-001130	RING-C	1	SNA	
5.7-19	JC70-00548A	HUB-CLUTCH	1	SNA	
5.7-20	6107-001372	SPRING CLUTCH	1	SNA	

IT-Spares.eu

5.8 Rear Guide

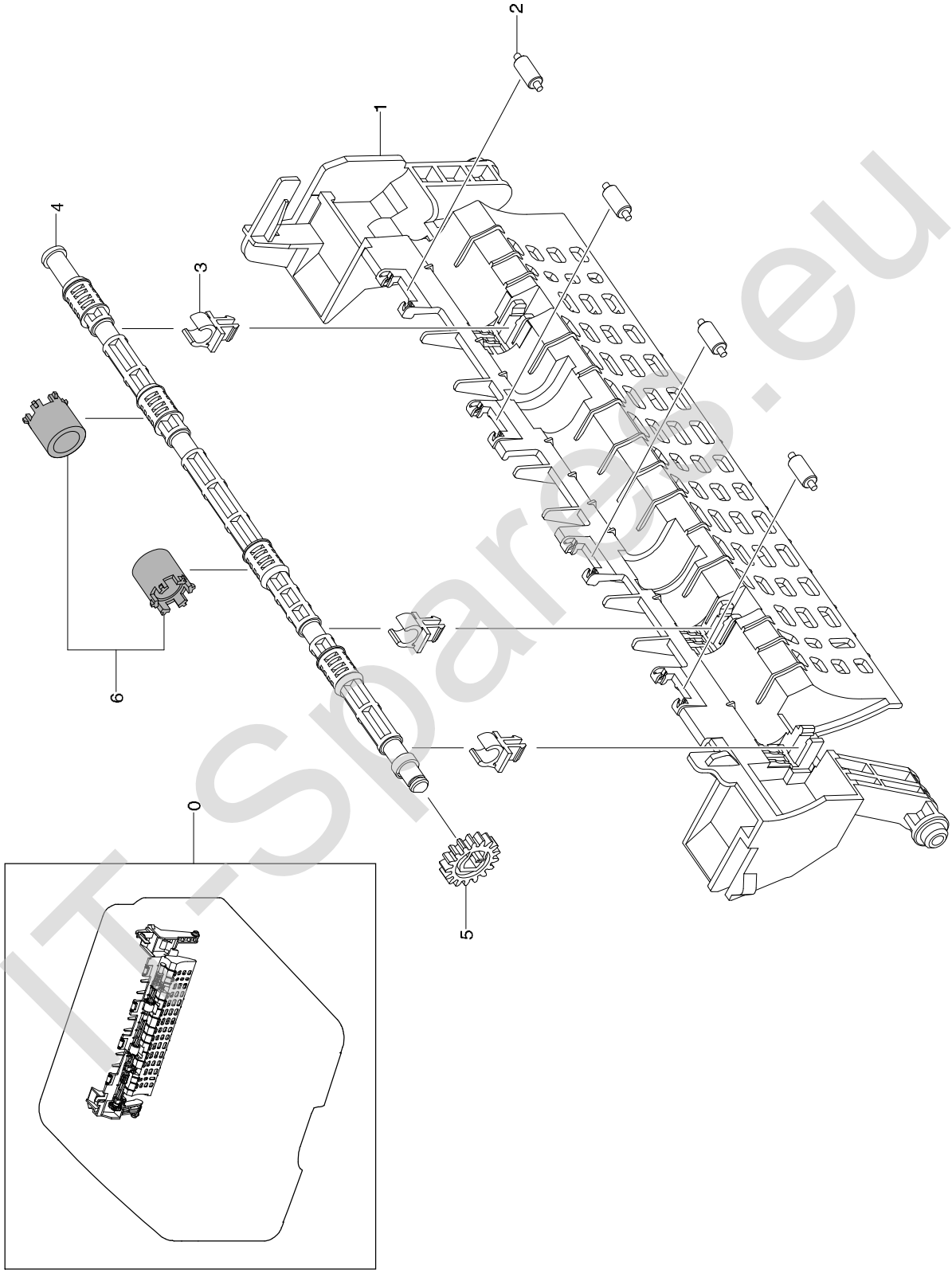

IT-Spares.eu

Rear Guide Parts List

SA : SERVICE AVAILABLE, SNA : SERVICE not AVAILABLE

Drawer#	SEC_Code	Description	QT'y	Service	Remark
5.8-0	JC97-03067A	MEA UNIT-GUIDE REAR	1	SA	
5.8-1	JC61-02198A	GUIDE-REAR	1	SNA	
5.8-2	JC66-01661A	ROLLER-IDLE_EXIT	4	SNA	
5.8-3	JC61-02158A	BUSH-TX	3	SNA	
5.8-4	JC66-01584A	SHAFT-EXIT_F/UP	1	SNA	
5.8-5	JC66-01583A	GEAR-EXIT	1	SA	
5.8-6	JC73-00259A	RUBBER-EXIT_F/UP	2	SNA	

IT-Spares.eu

5.9 Fuser

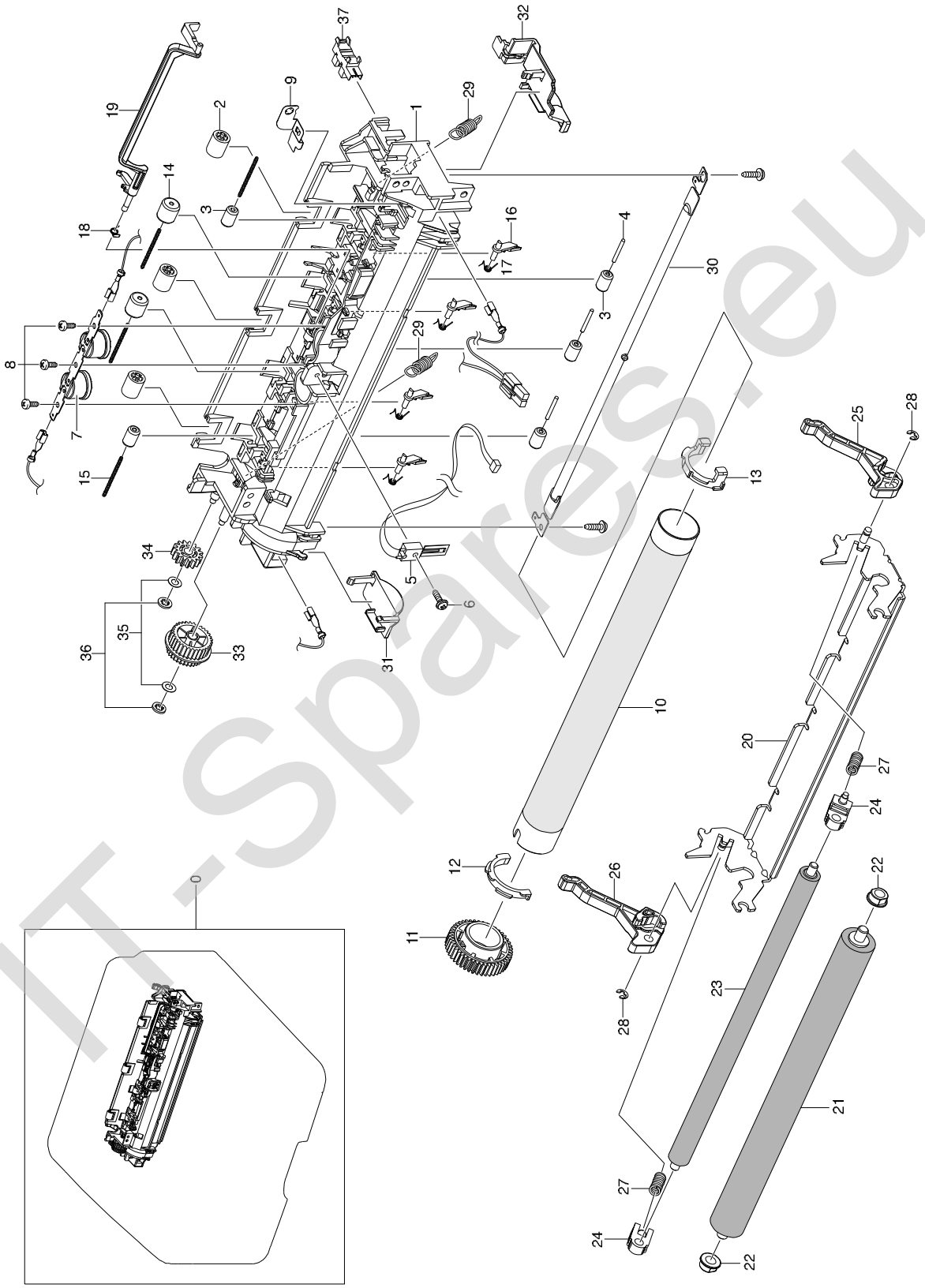

IT-Spares.eu

Fuser Parts List

SA : SERVICE AVAILABLE, SNA : SERVICE not AVAILABLE

Drawer#	SEC_Code	Description	QT'y	Service	Remark
5.9-0	JC96-04717A	ELA UNIT-FUSER	1	SA	
5.9-1	JC63-01517A	COVER-FUSER	1	SNA	
5.9-2	JC72-40981A	PMO-ROLLER UPPER DP	3	SA	
5.9-3	JC66-01312A	ROLLER-IDLE	5	SA	
5.9-4	JC70-20901A	IEX-SHAFT IDLE,F/UP	3	SA	
5.9-5	1404-001438	THERMISTOR-NTC ASSY	1	SA	
5.9-6	6003-000196	SCREW-TAPTITE	1	SNA	
5.9-7	4712-001031	THERMOSTAT	1	SA	
5.9-8	6003-000282	SCREW-TAPTITE	4	SNA	
5.9-9	JC63-01536A	GROUND-FUSER	1	SNA	
5.9-10	JC66-01256B	ROLLER-HEAT	1	SNA	
5.9-11	JC66-01254A	GEAR-FUSER	1	SA	
5.9-12	JC61-02334A	BUSH-HR-L	1	SNA	
5.9-13	JC61-02335A	BUSH-HR-R	1	SNA	
5.9-14	JC72-20902A	PEX-ROLLER F/UP(2)	2	SA	
5.9-15	6107-001359	SPRING-ETC	4	SA	
5.9-16	JC61-02154A	GUIDE-CLAW	4	SNA	
5.9-17	JC61-01950A	SPRING ETC-CLAW	4	SA	
5.9-18	6107-001165	SPRING-TS	1	SA	
5.9-19	JC66-01595A	ACTUATOR-EXIT	1	SNA	
5.9-20	JC61-02197A	FRAME-FUSER	1	SNA	
5.9-21	JC66-01663A	ROLLER-PRESSURE	1	SNA	
5.9-22	JC61-02336A	BUSH-PR-1ST	2	SNA	
5.9-23	JC66-01664A	ROLLER-PRESSURE_2ND	1	SNA	
5.9-24	JC61-02337A	BUSH-PR-2ND	2	SNA	
5.9-25	JC66-01598A	LEVER-LINK JAM_R	1	SNA	
5.9-26	JC66-01597A	LEVER-LINK JAM_L	1	SNA	
5.9-27	6107-001246	SPRING-CS	2	SNA	
5.9-28	6044-000159	RING-C	2	SA	
5.9-29	6107-001361	SPRING-ES	2	SA	
5.9-30	4713-001212	LAMP-HALOGEN	1	SA	
5.9-31	JC67-00266A	CAP-LAMP_L	1	SNA	
5.9-32	JC67-00267A	CAP-LAMP_R	1	SNA	
5.9-33	JC66-01638A	GEAR-FUSER RDCN 28-20	1	SA	
5.9-34	JC66-00056A	GEAR-MPF 5	1	SNA	
5.9-35	6031-001051	WASHER-PLAIN	2	SNA	
5.9-36	6044-000001	RING-CS	2	SNA	
5.9-37	0604-001095	PHOTO-INTERRUPTER	1	SA	

IT-spares.eu

5.10 Duplex Unit

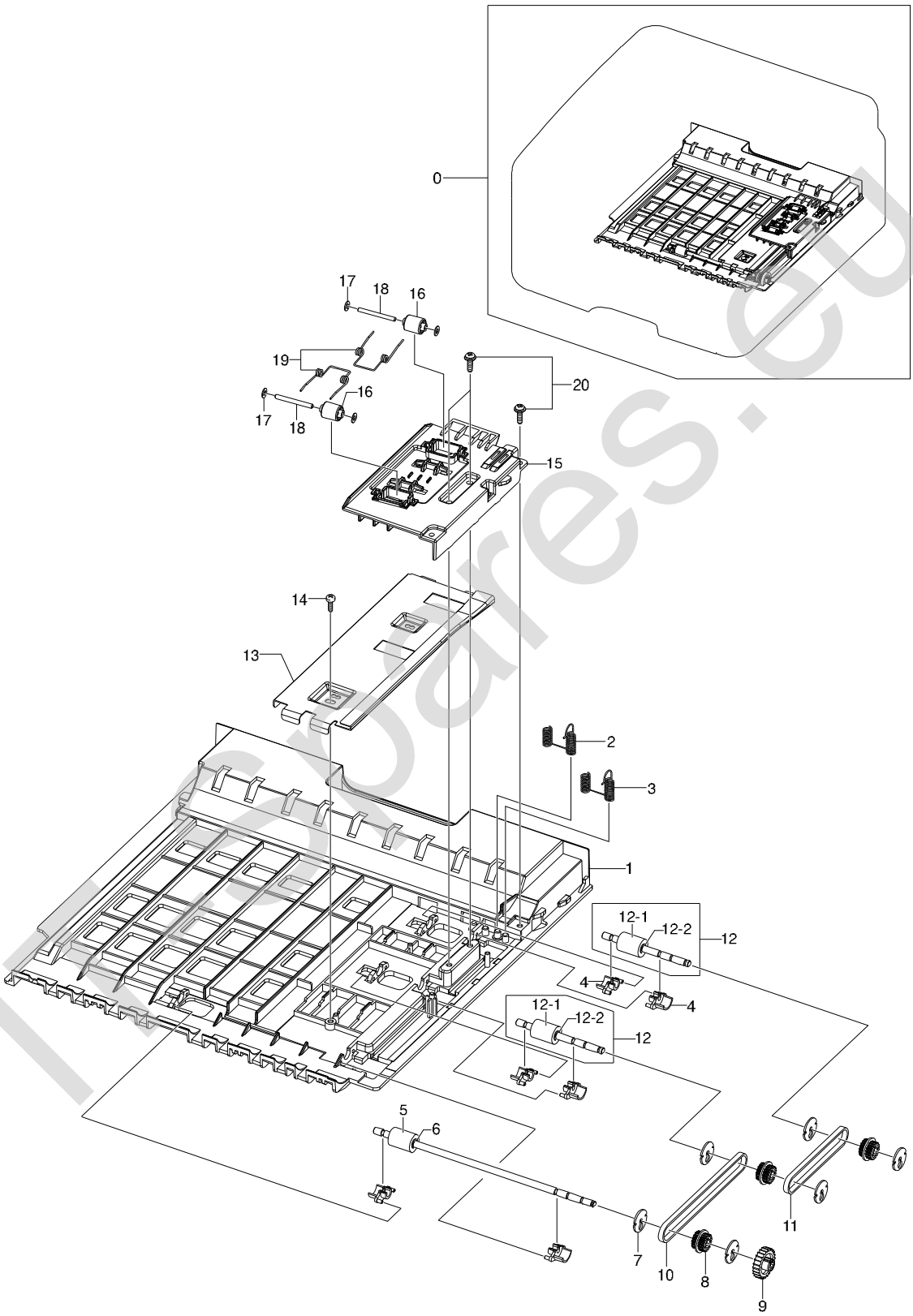

IT-Spares.eu

Duplex Unit Parts List

SA : SERVICE AVAILABLE, SNA : SERVICE not AVAILABLE

Drawer#	SEC_Code	Description	QT'y	Service	Remark
5.10-0	JC96-04736A	ELA UNIT-DUPLEX	1	SA	
5.10-1	JC61-02188A	FRAME-DUPLEX_BASE	1	SNA	
5.10-2	JC65-00036A	TERMINAL-GND_DUP L	1	SA	
5.10-3	JC65-00035A	TERMINAL-GND_DUP S	1	SA	
5.10-4	JC61-00665A	BUSH-M-FEED, DUP	6	SA	
5.10-5	JC66-01657A	ROLLER-FEED_DUP2	1	SNA	
5.10-6	6044-000107	RING-C	1	SNA	
5.10-7	JC66-00900A	PULLEY-M-18-DUMMY_DUP	6	SA	
5.10-8	JC66-00899A	PULLEY-18_DUP	3	SA	
5.10-9	JC66-00038A	GEAR-EXIT F/DOWN	1	SA	
5.10-10	6602-001589	BELT-TIMING GEAR	1	SA	
5.10-11	6602-001588	BELT-TIMING GEAR	1	SA	
5.10-12	JC96-03662A	ELA UNIT-ROLLER_DUP	2	SNA	
5.10-12-1	JC66-00901A	ROLLER-FEED_DUP	1	SA	
5.10-12-2	6044-000107	RING-C	1	SNA	
5.10-13	JC61-02235A	BRACKET-DUPLEX_ALIGN	1	SNA	
5.10-14	6003-000440	SCREW-TAPPING	1	SNA	
5.10-15	JC61-02314A	GUIDE-DUPLEX_UPPER	1	SNA	
5.10-16	JC66-00896A	ROLLER-M-IDLE_ DUP	2	SA	
5.10-17	JK72-00058A	PCT-SILP WASHER	4	SNA	
5.10-18	JC66-00444A	SHAFT-IDLE ROLL, DUP	2	SA	
5.10-19	6107-001156	SPRING-TS	2	SA	
5.10-20	6003-000196	SCREW-TAPTITE	3	SNA	

IT-Spares.eu

5.11 Cassette

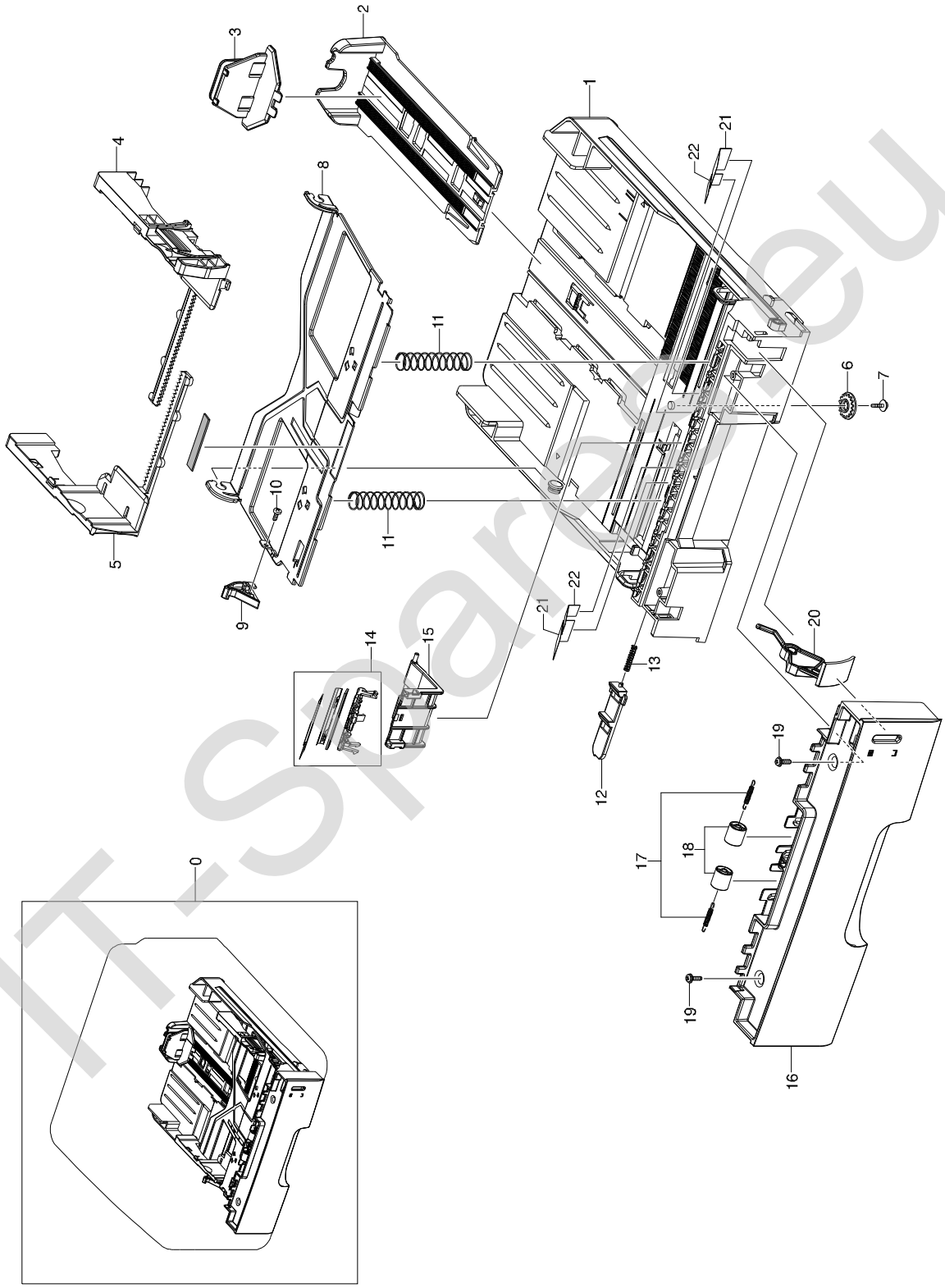

IT-Spares.eu

Cassette Parts List

SA : SERVICE AVAILABLE, SNA : SERVICE not AVAILABLE

Drawer#	SEC_Code	Description	QT'y	Service	Remark
5.11-0	JC97-03017A	MEA UNIT-CASSETTE	1	SA	
5.11-1	JC61-00876A	FRAME-M_CASSETTE	1	SA	
5.11-2	JC61-00918B	GUIDE-M-EXTENSION L2	1	SA	
5.11-3	JC72-00971A	PMO-EXTENSION SMALL	1	SA	
5.11-4	JC70-00301A	ADJUST-M-CASSETTE_R	1	SA	
5.11-5	JC70-00300A	ADJUST-M-CASSETTE_L	1	SA	
5.11-6	JG66-40003A	GEAR-PINION	1	SA	
5.11-7	6003-000264	SCREW-TAPTITE	1	SA	
5.11-8	JC61-00603A	PLATE-P-KNOCK_UP	1	SA	
5.11-9	JC66-00719A	CAM-M-KNOCK UP	1	SA	
5.11-10	6003-000261	SCREW-TAPTITE	1	SA	
5.11-11	6107-001166	SPRING-CS	2	SA	
5.11-12	JC72-00972A	PMO-PLATE_LOCKER	1	SA	
5.11-13	JG61-70531A	SPRING ETC-LOCKER,PLATE	1	SA	
5.11-14	JC96-04743A	ELA HOU-HOLDER_PAD	1	SA	
5.11-15	JC61-01978A	HOUSING-HOLDER PAD	1	SA	
5.11-16	JC63-01531A	COVER-HANDLE_CASSETTE	1	SA	
5.11-17	6107-001047	SPRING-ES	2	SA	
5.11-18	JC66-00529A	ROLLER-M-IDLE FEED	2	SA	
5.11-19	6003-000196	SCREW-TAPTITE	2	SA	
5.11-20	JC64-00353A	INDICATOR-PAPER	1	SA	
5.11-21	JC63-01670A	SHEET-GUIDE_SIDE_FAR	2	SA	
5.11-22	JC63-01671A	SHEET-GUIDE_SIDE_NEAR	1	SA	

IT-Spares.eu

5.12 SCF

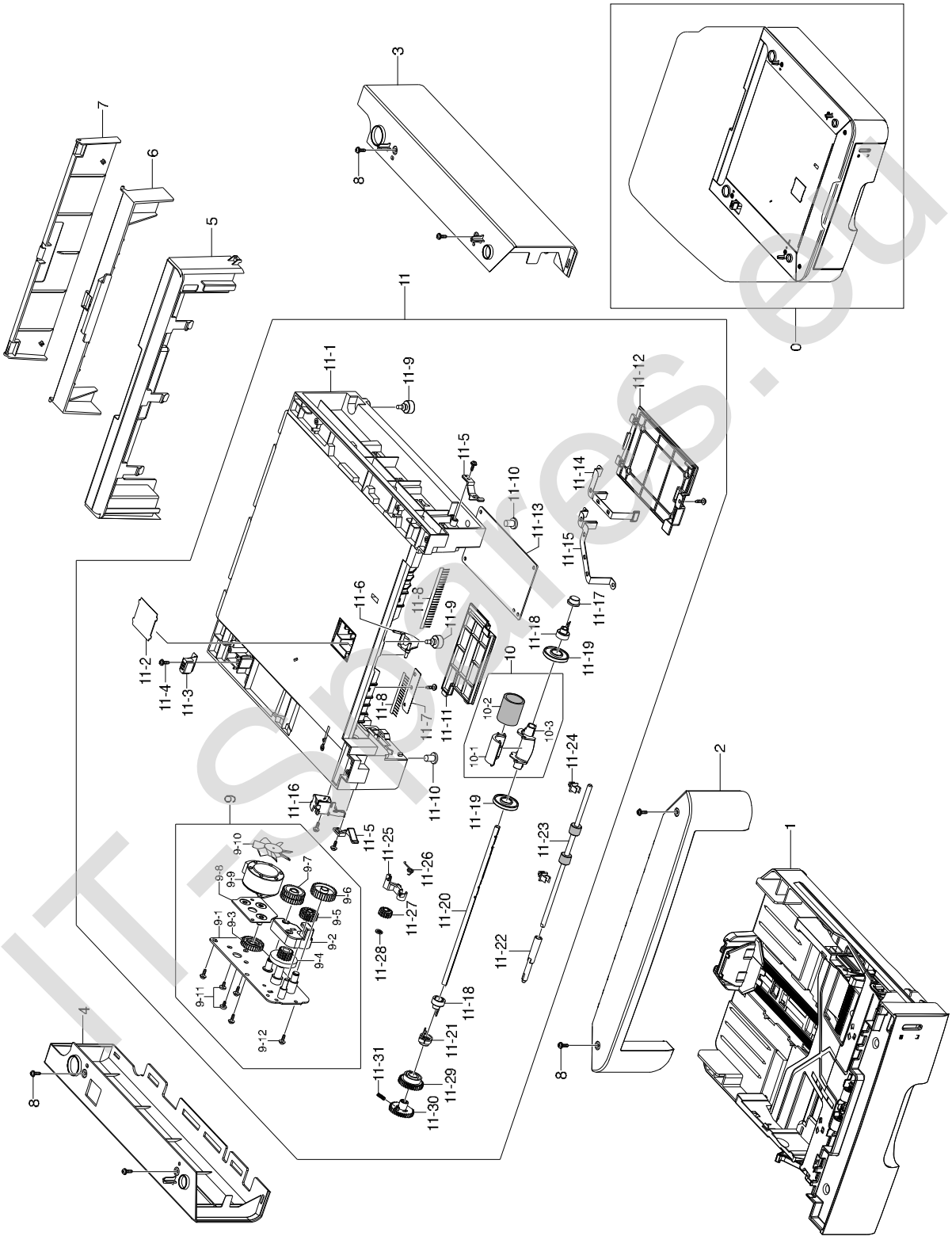

ITspares.eu

SCF Parts List

SA : SERVICE AVAILABLE, SNA : SERVICE not AVAILABLE

Drawer#	SEC_Code	Description	QT'y	Service	Remark
5.12-0	JC96-04735A	ELA UNIT-SCF	1	SNA	
5.12-1	JC97-03017A	MEA UNIT-CASSETTE	1	SNA	
5.12-2	JC63-01607A	COVER-FRONT_SCF	1	SNA	
5.12-3	JC63-01530A	COVER-RIGHT_SCF	1	SNA	
5.12-4	JC63-01529A	COVER-LEFT_SCF	1	SNA	
5.12-5	JC63-01608A	COVER-REAR_SCF	1	SNA	
5.12-6	JC63-01650A	COVER-DUPLEX	1	SNA	
5.12-7	JC63-01651A	COVER-REAR DUPLEX	1	SNA	
5.12-8	6003-000196	SCREW-TAPTITE	6	SNA	
5.12-9	JC96-04772A	ELA HOU-MOTOR_SCF	1	SA	
5.12-9-1	JC61-02228A	BRACKET-MOTOR_SCF	1	SNA	
5.12-9-2	JC61-02234A	SUPPORT-FEED_SCF	1	SNA	
5.12-9-3	JC66-01785A	GEAR-IDLE 59	1	SA	
5.12-9-4	JC66-00688A	GEAR-61/47 IDLE	1	SNA	
5.12-9-5	JC66-00396A	GEAR-IDLE 23	1	SA	
5.12-9-6	JC66-00690A	GEAR-35 IDLE	1	SNA	
5.12-9-7	JC66-01784A	GEAR-RDCN 57/18	1	SA	
5.12-9-8	JC61-02229A	BRACKET-GEAR_SCF	1	SNA	
5.12-9-9	JC31-00011E	MOTOR STEP	1	SA	
5.12-9-10	JC72-00825A	PMO-IMPELLER_DRV	1	SA	
5.12-9-11	6003-000269	SCREW-TAPTITE	5	SA	
5.12-9-12	6031-000023	WASHER-PLAIN	3	SNA	
5.12-10	JC97-03062A	MEA UNIT-PICK UP	1	SNA	
5.12-10-1	JC61-00909A	HOUSING-M-PICK UP_R2	1	SA	
5.12-10-2	JC73-00265A	RUBBER-PICK_UP	1	SA	
5.12-10-3	JC61-00910A	HOUSING-M-PICK UP2_R2	1	SA	
5.12-11	JC96-04771A	ELA HOU-FRAME_SCF	1	SNA	
5.12-11-1	JC61-02189A	FRAME-SCF	1	SNA	
5.12-11-2	JC63-00369A	SHEET-COVER SENSOR	1	SA	
5.12-11-3	JC70-11028A	IPR-GROUND TOP	1	SA	
5.12-11-4	6003-000196	SCREW-TAPTITE	11	SNA	
5.12-11-5	JC72-00983A	PMO-LOCKER CST	2	SA	
5.12-11-6	JC72-00975A	PMO-ACTUATOR EMPTY	1	SA	
5.12-11-7	JC63-00527A	SHEET-BRUSH	1	SA	
5.12-11-8	JC75-00095A	MEC-BRUSH ANTISTATIC	0.5	SA	
5.12-11-9	JC61-40001A	FOOT-ML80	2	SA	
5.12-11-10	JC61-00836A	FOOT-FRONT	2	SA	
5.12-11-11	JC63-01609A	COVER-HARNESS_SCF	1	SNA	
5.12-11-12	JC63-00492A	COVER-M-SIMM R2	1	SA	
5.12-11-13	JC92-01911A	PBA-SCF	1	SA	
5.12-11-14	JC63-01636A	GROUND-PAPER_SCF	1	SNA	
5.12-11-15	JC63-01635A	GROUND-BRUSH_SCF	1	SNA	
5.12-11-16	JC33-00026A	SOLENOID-PICK UP	1	SA	

IT-spares.eu

SCF Parts List

SA : SERVICE AVAILABLE, SNA : SERVICE not AVAILABLE

Drawer#	SEC_Code	Description	QT'y	Service	Remark
5.12-11-17	JC61-00587A	BUSH-M-PICK_UP R	1	SA	
5.12-11-18	JC61-00915A	STOPPER-M-PICK UP_R2	2	SA	
5.12-11-19	JC72-00982A	PMO-IDLE PICK_UP	2	SA	
5.12-11-27	JC66-00394A	GEAR-FEED 2	1	SA	
5.12-11-29	JC72-00980A	PMO-GEAR PICK_UP B	1	SA	
5.12-11-31	6107-001170	SPRING-TS	1	SA	
5.12-21	JC61-00586A	BUSH-M-PICK_UP L	1	SA	
5.12-22	JC66-01653A	SHAFT-FEED_SCF	1	SNA	
5.12-23	JC66-00598A	ROLLER-FEED	1	SA	
5.12-24	JC72-00382B	PMO-BUSHING FEED	2	SA	

IT-Spares.eu